EoSens GE Supersensitive High Speed-Camera – GigE Vision

Innovative Technology for Maximum Light Efficiency

- **Maximum Photo Sensitivity (2500 ASA Monochrome, 700 ASA RGB)**
- **1280(H) x 1024(V) CMOS-Sensor**
- **Up to 80 Frames per Second (fps) at Full Resolution**
- **Up to 80,000 fps at Reduced Resolution**
- **GigE Vision® Interface at 110 MB/Second**
- **Monochrome or Color with BAYER Filter**
- **Extended Dynamic Range up to 90 dB**
- **Multiple Frame Exposure**
- **Multiple RoI**
- **X- and Y-Mirroring of Image Data**
- **Small and Compact Design**
- **Optional C-/F-Lens Mount**

Maximum Photo Sensitivity

No more attention to the light – the Eo*Sens* is the first high speed camera with a photo-sensitivity of 2500 ISO/ASA. Thus Eo*Sens* opens up completely new potentials for high speed inspection/monitoring. Even in low-light conditions, Eo*Sens* provides high speed images without complex lighting equipment.

Dynamic Range Adjustment of Extreme Contrasts

Through 2 selectable steps, the camera's dynamic range adjustment option allows to approach the CMOS sensor's linear range into a dynamic range corresponding to the non-linear human eye. Consequently, Eo*Sens* provides definite image details even in case of extreme dark-light contrasts, which means an invaluable benefit exceptionally in image processing.

Multiple Pixel Exposure for Indefinite Lighting Conditions

If desired, pixel exposure can be accumulated up to 7 times, resulting in alternative image exposures. The optimally exposed image can be selected for further processing. At indefinite lighting conditions, as in 24h outdoor applications, Eo*Sens* becomes the high speed camera that spots everything.

Flexible in Resolution and Speed

Eo*Sens* GE transfers up to 80 frames/second at maximum resolution of 1280(H) x 1024(V) pixels. By free choice of the Region of Interest (RoI), frame rate can be increased up to 80,000 fps.

Multiple RoI for the Choice of Several Objects

Eo*Sens* allows to simultaneously choose up to three individual RoIs within the complete frame range. Thus, multiple objects can be captured independently at the same time.

High Speed Vision Through Gigabit Ethernet

Eo*Sens* GE is the high speed camera made for Gigabit Ethernet. Without costly hardware, Eo*Sens* GE is ready-to-use at any current Gigabit Ethernet PC or notebook. The camera's GigE Vision standard enables easy connection and parametrization of camera, hardware and software.

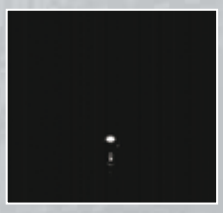

Standard High Speed

Eo*Sens*

Eo*Sens* Dynamic Range Adjustment

Mikrotron GmbH
Landshuter Str. 20-22
D-85716 Unterschleissheim
Tel.: +49 (0) 89-72 63 42-00
Fax: +49 (0) 89-72 63 42-99
info@mikrotron.de • www.mikrotron.de

Special Electronics
Digital SlowMotion
Image Processing

MIKROTRON

EoSens GE Supersensitive High Speed-Camera – GigE Vision

Technical Data	
Photo Sensitivity	2500 ASA, monochrome 700 ASA, color
Resolution	1280(H) x 1024(V)
Pixel Size	14 x 14 µm
Active Sensor Area	17,92(H) x 14,34(V) mm 22,9 mm diagonal
Fill Factor	40%
Illumination	25 V/lux-sec
Frame Rate	80 fps at 1280 x 1024 pixel
Maximal Frame Rate (red. Resolution)	80,000 fps
Data Width	8 or 10 Bit
Video Output	Gigabit Ethernet, GigE Vision standard
Pixel Clock	80 Mhz
Shutter	Internal timer, 1024 steps 2 µs - 1 s or pulse width of external trigger signal
Gain	Digital 1 - 4 times, 1/1024 steps
Pixel Binning	Vertical/horizontal
Camera Configuration	Via GenAPI
Power Supply	8 .. 24 V DC
Power Consumption	5 W
Environmental Temperature	+5 ... +50 °C
Shock, Vibration	70g, 7grms
Lens Mount	C- or F-mount
Dimensions (B x H x T)	63 x 63 x 47 mm
Weight	300 g

Type Selection			
Name	Color/Mono	Interface	Max fps @ 1280 x 1024
Eo*Sens* GE	M	GigE Vision®	80
Eo*Sens* GE	C	GigE Vision®	80

Connector pin assignment			
12-pol. Hirose			
Pin	Signal	Pin	Signal
1	GND	7	
2	VCC (8 – 24V)	8	
3	GND STROBE	9	
4	STROBE	10	
5	GND TRIG	11	VCC (8-24V)
6	TRIGGER	12	GND

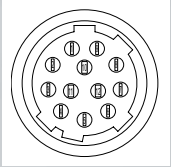

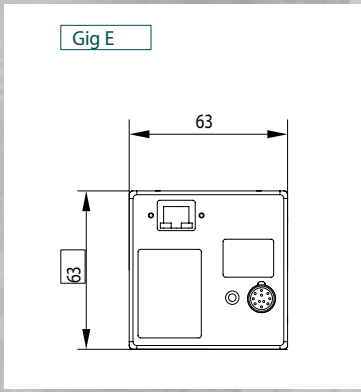

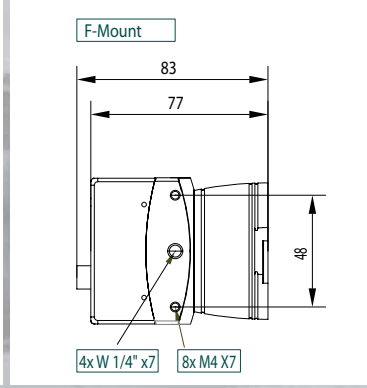

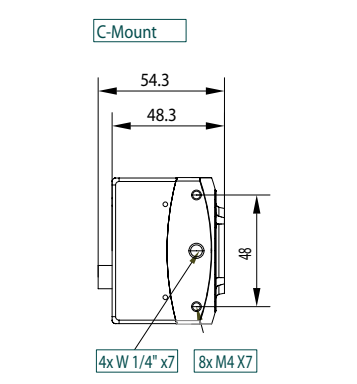

All brand and product names which appear in this document may be trademarks or registered trademarks of the corresponding companies. We reserved the right to change specification without notification.

Issue 10/2007

Mikrotron GmbH
Landshuter Str. 20-22
D-85716 Unterschleissheim
Tel.: +49 (0) 89-72 63 42-00
Fax: +49 (0) 89-72 63 42-99
info@mikrotron.de • www.mikrotron.de

Special Electronics
Digital SlowMotion
Image Processing

MIKROTRON